2840 N Brookfield Rd, Suite 3
Brookfield, WI 53045

PH: 262.505.5124
sales@klikusa.com

www.klikusa.com

Project Name: .....

Location: .....

Specifier: .....

Rep Agency: .....

Fixture Type: .....

Product Code: .....

KLIK MISTIK™ Cylinder

DESCRIPTION

A sleek, surface-mounted minimalist LED sconce that is discreet and easy to install. Suitable for a wide range of exterior and interior surfaces, including railing stanchions, posts, walls, awnings, canopies, and trellises. Offered in both asymmetric and symmetric designs with various lens options available.

HOUSING

The product features an IP65 and IK10 rated brushed 316 stainless steel body, designed with options for either a flat or curved mounting plate, ideal for variety of round posts or surfaces. It is also available in a range of powder-coated colors.

MOUNTING

Brushed 316 stainless steel mounting plate with either a flat or curved mounting surface plate.

- Allow 3/8" in post for power entry
- Can suit the following round post diameter sizes:
  Ø1.50" [38mm]
  Ø1.66" [42mm]
  Ø1.90" [48mm]

ELECTRICAL/LED DRIVER

- Input Voltage: 24 VDC
- Primary Driver: KLIK provided Class II, 110 - 277 VAC UL Listed Constant Voltage
- Secondary Driver: 350 - 700mA Constant Current (provided with fixture)
- Control: 0-10V, DMX [not individually addressable]
- Enclosures: [see details below]
- Wire connectors provided; factory pre-wire available, consult factory

LISTINGS

- ETL listed, UL 1598/CSA 22.2; CE
- cETL
- IP65 [wet location]
- *All IP rated luminaires tested to AS60529-2004 Degrees of protection provided by enclosures (IP Code)*
- IK08 or IK10 Impact Resistant
- Class 2 Device
- International Dark Sky Certified
  [Color temperature must be Amber or <3000K]



Post Diameter
Ø1.50" [38mm] Ø1.66" [42mm] Ø1.90" [48mm]



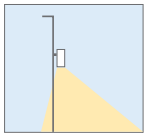

Asymmetrical
90° beam

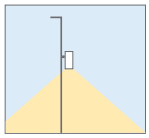

Symmetrical
120° beam

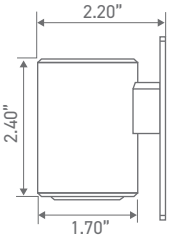

ETL listed
UL 1598/CSA 22.2; CE

Weatherproof Rating:
IP65
Wet location rated

Impact resistance:
IK10

Wildlife friendly

LED Operating Temp:
-40°F – 160°F

3G Vibration
per MIL-STD-810G

BABA Compliant
[Add Prefix 'BA-' to fixture code]

International Dark Sky Association Certified Amber ≤ 3000K

* All IP rated luminaires tested to AS60529-2004 Degrees of protection provided by enclosures (IP Code)

KLIK USA
2840 N Brookfield Rd, Suite 3
Brookfield, WI 53045
PH: 262.505.5124
sales@klikusa.com
www.klikusa.com

KLIK MISTIK™ 023 Cylinder

SPECIFICATION TABLE

Follow the steps to specify your fixture. Enter Product Code in field at top of page. Example: MKRC30KA500FL

Fixture Type	Color Temp [K]	Distribution	Output [W]	Optic	Lens Options	Housing Options	Mounting	Control
MKCY	**22K** 2200K **27K** 2700K **30K** 3000K **35K** 3500K **40K** 4000K **AMB** FWC Amber **PCA** Phosphor converted Amber **R** Red **G** Green **B** Blue	**A** Asymmetric **S** Symmetric	**350** 350mA 1.5W **500** 500mA 1.95W [Std] **700** 700mA 2.7W	- Flood [Std]	- Clear Lens [Std] **FR** Opaque frost **OT** Optical filter	- 316 Brushed Stainless Steel **DUL** Dulux Colors - Request Guide **RAL** RAL #	**FL** Flat Surface **P38** 1.5" OD Post **P42** 1.66" OD Post **P48** 1.90" OD Post	- 0-10V Dim **DMX1** DMX 1 Ch **DMX4** DMX 4 Ch **PH** Phase Dim

LED PERFORMANCE

LED:	Cree XT-E
CCT:	2700, 3000, 4000 *(others available)*
CRI:	80-85
Life:	80% at 50k hrs and 85°C
Binning:	3 MacAdam Steps
Warranty:	5 Year Warranty

Outputs based on 3000K

W	mA	V	SYMMETRICAL Delivered Lumens	ASYMMETRICAL Delivered Lumens
1.4	350	3	135	87
1.9	500	3	197	133
2.7	700	3	258	175

REMOTE MOUNTING DISTANCE CHART

24 VDC 100W Driver	Approx. distance from driver to first LED at 32 fixtures			
Wire Size	10 AWG	12 AWG	14 AWG	16 AWG
Distance	525'	328'	213'	131'

Calculations based on 2' centers between pods. Increased spacing reduces number of pods per circuit.

PRIMARY DRIVER

110 - 277 Primary Voltage
Remotely Mounted
Dimming Control
10" x 1.5" x 2"

Secondary LED Driver	Spacing	Maximum KLIK LEDpods™*
700mA	24"	30
500mA	24"	37
350mA	24"	50

*Based on 16 AWG between LEDpods

REMOTE POWER SUPPLIES [PSUs]

LP040WPRITRNDIMIP	Class 2; 40W; 0-10 Dim Constant Voltage Remote PSU [IP67 (Temp Submersion) Rated; -40°C ~ +85°C]
LP096WPRITRNDIM	Class 2, 96W, 0-10 Dim Constant Voltage Remote PSU [IP67 (Temp Submersion) Rated; -40°C ~ +80°C]
LP100WPRITRNDIM	Class 2, 96W, 0-10 Dim Constant Voltage Remote PSU [IP64 (Damp Location) Rated; -25°C ~ +40°C]
LPQZ96WUNV24VPH010	Class 2, 96W, Phase or 0-10 Dim Constant Voltage Remote PSU [IP66 (Wet Location) Rated; -40°C ~ +60°C]
LPQZ96WUNV24VDMX1CH	Class 2, 96W, 8-Bit DMX Dim Constant Voltage Remote PSU [IP66 (Wet Location) Rated; -40°C ~ +60°C]
LPQZ96WUNV24VDMX4CH	Class 2, 96W, 8-Bit DMX Dim Constant Voltage Remote PSU [IP66 (Wet Location) Rated; -40°C ~ +60°C]

REMOTE NEMA ENCLOSURES

LPNEMA2ENCL	NEMA2 INDOOR enclosure for LP100WPRITRNDIM, 12 x 3.3 x 2
LPNEMA3RENCLJR	NEMA3R Drip Proof Enclosure, 4 x 4 x 12 [IP24 Equivalent]
LPNEMA4XTROSS	NEMA4 304 Lockable Stainless Steel Watertight Enclosure 4 x 4 x 12 [IP24 Equivalent]
LPNEMA4ENCLJR	NEMA4 Watertight Enclosure, 6 x 4 x 12 [IP66 Equivalent]; NEMA4X
LPNEMA4XENCLSSJR	NEMA4 304 Lockable Stainless Steel Watertight Enclosure 6 x 4 x 12 [IP66 Equivalent] NEMA4X
LPNEMA6PTRO	NEMA6 Watertight Enclosure Wiring Trough, 2 x 3 x 14 [IP68 Equivalent]

Additional driver & enclosure configurations available, including IP68 options
Please note the KLIK UL Listing requires purchase of a remote driver and enclosure.

2840 N Brookfield Rd, Suite 3
Brookfield, WI 53045

PH: 262.505.5124
sales@klikusa.com

www.klikusa.com

KLIK MISTIK™ 023 Cylinder

INSTALLATION INSTRUCTIONS

Additional instructions may apply, consult factory. Hardware by others.

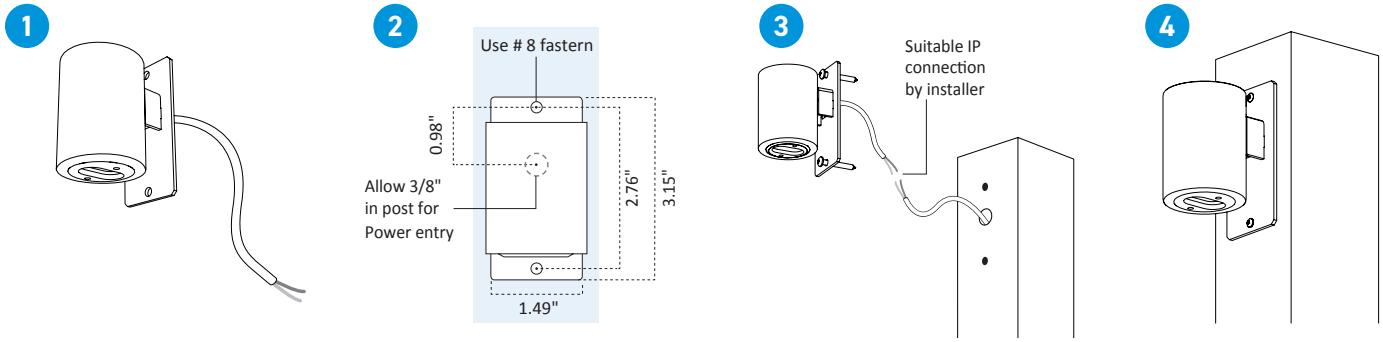

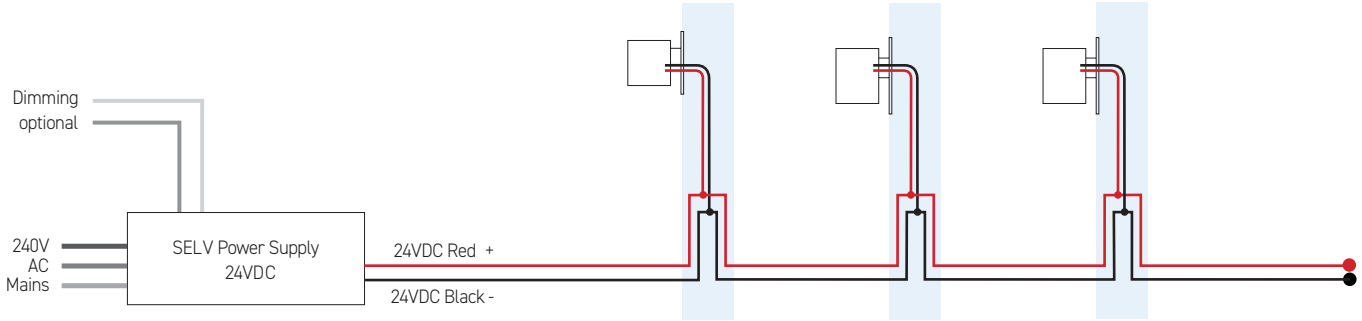

MISTIK OPTIONS

